Copied from an original at The History Center. www.TheHistoryCenterOnline.com 2013:023

THE LUFKIN LINE

Published monthly to advance and promote friendly service with the customers of The Lufkin Foundry & Machine Co., Lufkin, Texas

Vol. 2 January, 1923 No. 6

The Passing of Samuel T. Woodring

IT is the Line's sincere regret to record the sudden death of Col. Samuel T. Woodring, December 28th, at his home in Lake Charles, La., following an illness of a few hours.

Col. Samuel T. Woodring was born in Indiana, April 14th, 1868. On February 2nd, 1891, he married Miss Mary Ashby of Kansas, who now survives him.

The title of Colonel came from being a colonel on the State Governor's staff, J. Y. Sanders being Governor.

Colonel Woodring was one of the best known men in the lumber industry of the South, and particularly in Louisiana, in which state he had been an active figure in all movements tending to promote the best interests of the lumber industry.

Colonel Woodring, who at the time of his death, was General Manager of Long-Bell Lumber Company, Calcasieu Division, began his service with the Long-Bell organization in 1892 in the retail yard at Kingfisher, Okla. Early in 1896 he was transferred to the Company's office at Texarkana, Texas, in 1901 he was placed in charge of sales of the Globe Lumber Company, Inc., at Yellow Pine, La., a Long-Bell associated Company. From 1905 to 1906 he was with the sales department in St. Louis, Mo., and in 1906 he was transferred to Lake Charles, as Treasurer-General Manager, Calcasieu Long Leaf Lumber Company, this Company just lately having been merged with Long-Bell Lumber Company and now known as Long-Bell Lumber Company, Calcasieu Division. Mr. Woodring was elected a director of the Long-Bell Lumber Company in October 1914.

He has taken an active interest in the affairs of the Southern Pine Association and was also prominently identified with the forestry movement of the state, being one of the active men in the formation of the boys' forestry clubs, in the work of forestry legislation and in the work of the Louisiana State Forestry Association. By his death the state forestry movement loses one of its most active supporters.

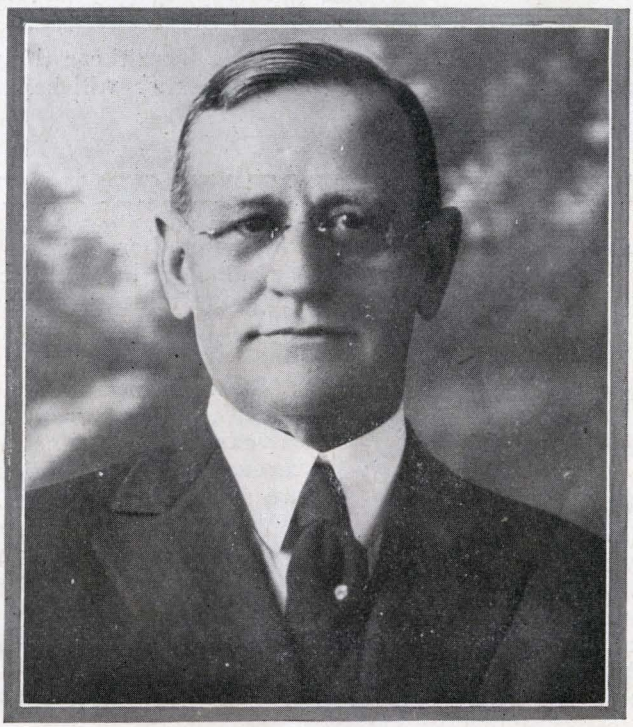

The late Colonel Samuel T. Woodring.. Prominent in the lumber industry and leading executive of the Long-Bell interests in the South.

He was chairman of the tax committee of the Southern Pine Association and was active in endeavors to arrange a proper method of Louisiana taxation.

Mr. Woodring was also active in every movement that had for its object the up-building of the city of Lake Charles, and in addition to being the executive head of its largest industry, he was a heavy owner of both city and country real estate. He was active in the fight to secure deep water for Lake Charles, in the movement to pave the streets and to give the city one of the best sewerage systems in the South. He was identified with local clubs and fraternal life to a prominent degree.

In his every day life Mr. Woodring was a most estimable and congenial man and was well liked by all who ever had the pleasure of his acquaintance. He was a leader at all

Copied from an original at The History Center. www.TheHistoryCenterOnline.com 2013:023

times in all of those things in which he was interested, being at all times one of the active advisers with those in charge of the business administration of the Long-Bell Lumber Company.

Not only the Long-Bell interests and the Southern Pine Industry, but the community at large, has lost a friend always faithful, courteous and kind, a man of sterling honor and integrity, of lovable character, large vision and unerring judgment, whose entire business career may be recalled with pride by his late Associates.

The funeral services were held from the Lake Charles home, and in addition to the lumbermen from Lake Charles, many prominent in the industry in the South, as well as all the higher officials of the Long-Bell Lumber Company, who could get there, attended.

A FORECAST OF EVENTS FOR 1923

Humanity is standing, in the manner of speaking, on the threshold of a new year. Some, it is true, will cross this threshold in a recumbent position, but what of it? The man that has to be carried into 1923 will have only his bootlegger to blame. What with counterfeited labels and one thing and another, you never know what you are getting these days.

As nearly as we can gather from data now at hand, 1923 will be just another year. Work, play, rain and sunshine will still be with us in about the standard proportions. There also will be births and deaths, with the medical life-prolonging experts again besting the birth-control contingent. Marriage will continue to be a popular institution in the expectation, and the divorce courts will not have to advertise.

There will be a war here and there, giving work to a lot of worthy ammunition makers. The Russians will starve on their regular schedule and the Armenians will be massacred with customary consistency. The peach crop will be ruined in April. Transatlantic captains will have "the worst passage in 40 years, man and boy." Illinois wives who do not like the neckties worn by their husbands will bump them off and be acquitted.

"Prominent society women," earning a little pin money by taking in washing, will figure strongly in the columns of the Hearst papers. Sixteen major league managers will win pennants in spring training. Hens will lay madly when eggs are cheap and stop when they are dear. Old men will marry young girls and wonder why they prefer dancing to reading the evening papers.

Bowlers will miss strikes on "perfect hits." Young women who can't sing, will. Automobile tires will blow out on rainy nights. Five million American golfers will be "off their game." Bootleggers will distill pig iron and call it whiskey. Umpires will rob the home club every day of the season. The reds will tell us how much better they do things in Russia. American tourists will go to Europe and sigh for corned beef and cabbage. Comic supplements will be just as bright as ever—as regards the colors of the ink.

Nobody will whip Jack Dempsey. Everybody will beat Earlham College. He-flappers will wear side-burns like Valentino and the police will do nothing about it. High school orators will announce that "beyond the Alps lies Italy." Newspapers will devote columns to a murder and inches to a scientific triumph. Farmers will raise potatoes for 25 cents a bushel and hotels will sell them for 25 cents an order. Pullman car windows will remain hermetically sealed and porters will leave the steam on full tilt all night. The police will "expect an arrest inside of 48 hours."

Aside from these things, our official forecaster cannot see that much will happen in 1923.

TESTING OUT LUFKIN-TAYLOR ROTARY

Hull, Texas, Jan. 31, 1923.

Lufkin Foundry & Machine Co.,
Lufkin, Texas.

Gentlemen:

I am handing you some pictures showing the LUFKIN-TAYLOR ROTARY at work, and this being the first machine I know you are anxious to know what results we have obtained.

Even with a green crew so far as a make and break rotary is concerned we get 2750 feet of 6⅝-inch casing in 11 hours and 30 minutes, really cutting the time about in half from the old method. We could have done better, perhaps two hours or more, but we were not working for a record, just doing our work in a regular manner, taking no chances on stripping threads or burning them as has been the case where some so-called "records" have been made.

We also did well in making and breaking drill pipe so far, in another location where we are down 2000 feet, we came out in a minute and one-half to the fourble, and only one minute to the fourble going in the hole. Of course as the well gets deeper we don't look for such good time.

The machine runs smoothly and with less noise than any other rotary that I have ever handled in all my years of experience. The lubrication system, lubricating through the hollow shaft, and the chain-oiling bearing are all working out fine. No dirt gets into them.

With some very minor changes that will improve the machine from a safety standpoint, which I will suggest later, I believe it will be the most practical and by far the most satisfactory machine on the market.

You are to be congratulated in getting out so successful a machine in the first one. It's a dandy.

Wishing you every success, I am yours,

W. H. TAYLOR,
Supt. Gulf Production Co., Hull, Texas.

Copied from an original at The History Center. www.TheHistoryCenterOnline.com 2013:023

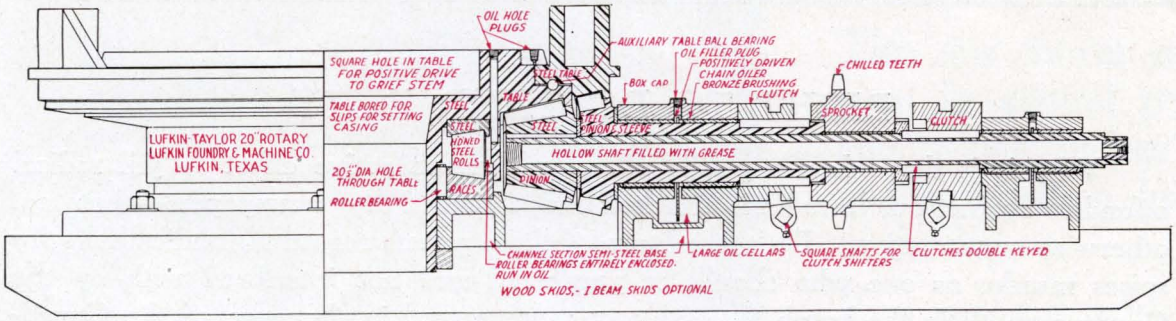

The Latest Sensation in Rotary Design
NOW IN SUCCESSFUL OPERATION

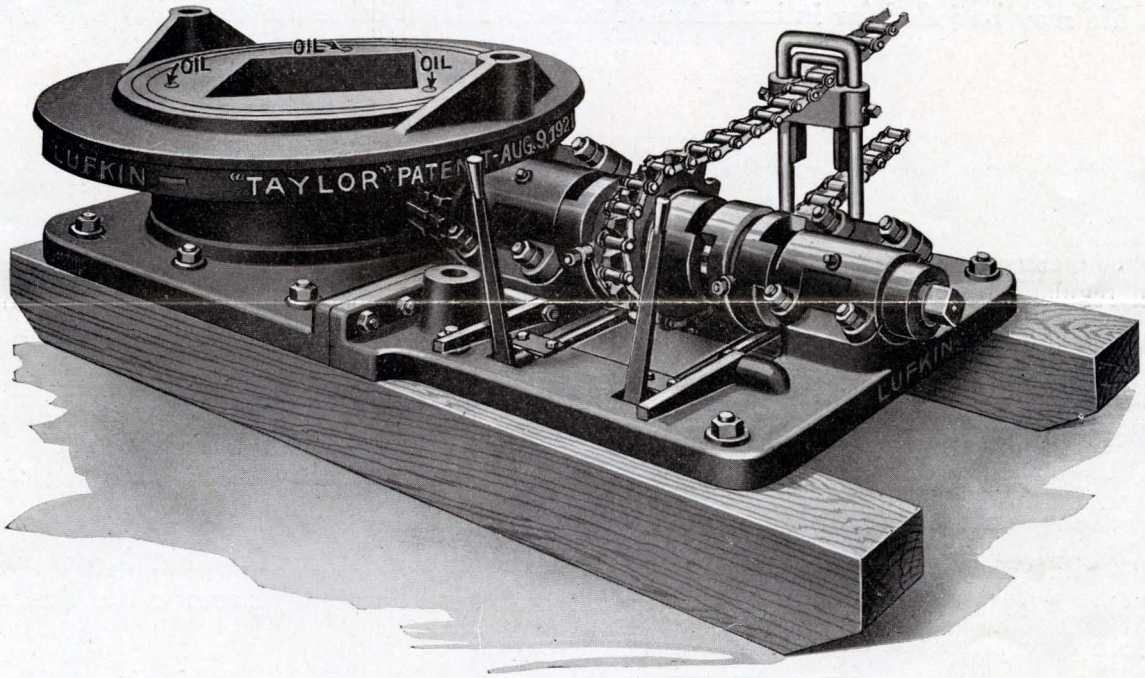

ALL STEEL TABLE 20½" ROTARY

Break or Unbreak Your Drill Pipe or Casing
Saves Time and Hard Labor

ASK US ABOUT IT.

Lufkin Taylor Rotary

Lufkin Foundry & Machine Company, Lufkin, Texas

Copied from an original at The History Center. www.TheHistoryCenterOnline.com 2013:023

Editorial Comment

RIGHT TO DO THEIR DUTY

Why is it that when a public officer makes an active effort to jail radical offenders against our laws he is attacked and ridiculed by newspapers—that are otherwise conservative. Do the editors of these papers regard the radical who inspires murder as one who should be pampered and not interfered with by the Government? Is the bomb thrower any more sacred in the eyes of the Constitution than the common murderer? Is prevention of burglary more desirable than the prevention of sabotage, which may wreck railroads and destroy human lives? Why is it that the alien anarchist must always be taken care of under the constitutional provisions of free speech, and the man who makes a threat to take a life may be jailed for intimidation of whatever legal crime he commits? Why?

THERE WILL BE A HOT TIME IN CONGRESS: — Something must be done about our Merchant Marine—

Here is the situation in a nutshell—The United States owns 1500 ships. Of these 1100 are rotting in idleness and 400 are being operated by the Shipping Board at a present annual loss of fifty million which is paid by the tax payers.

The President thinks the loss will be less by the subsidy Plan, but congress probably does not agree with him.

The only other course is to scrap all the boats or sell them for what they would bring. This would mean a gigantic loss and would virtually remove the American Flag from the seas—

A nice kettle of Fish, Eh What?

The country might stand mills for the soldiers but not for one cent for the American Shipping Trust—Americans don't believe in Subsidy's?

The guy that said "Necessity is the mother of invention," should have also added "Criticism is the mother of perfection." We strive to be as perfect as possible--We invite criticism, we consider it an aid—likewise a compliment.

Copied from an original at The History Center. www.TheHistoryCenterOnline.com 2013:023

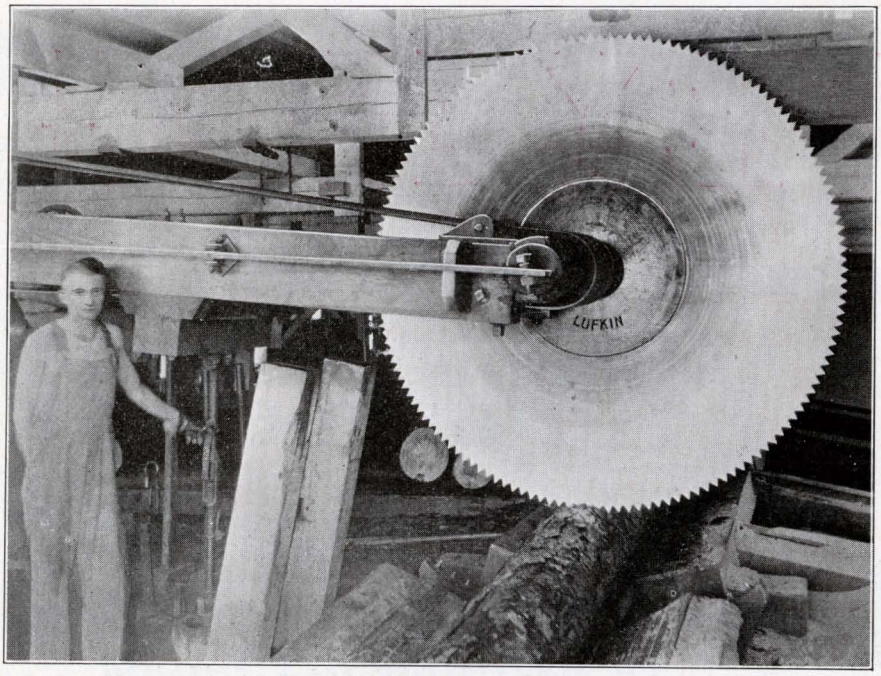

Our adjustable log cut off saw

Adjustable Log Cut Off Saw

This saw moves each way from its central point four and a half inches or nine inches variation lengthwise of the log.

You can cut a log exactly without jerking the log chain. Users consider it a great help in getting logs cut just right as well as a time saver.

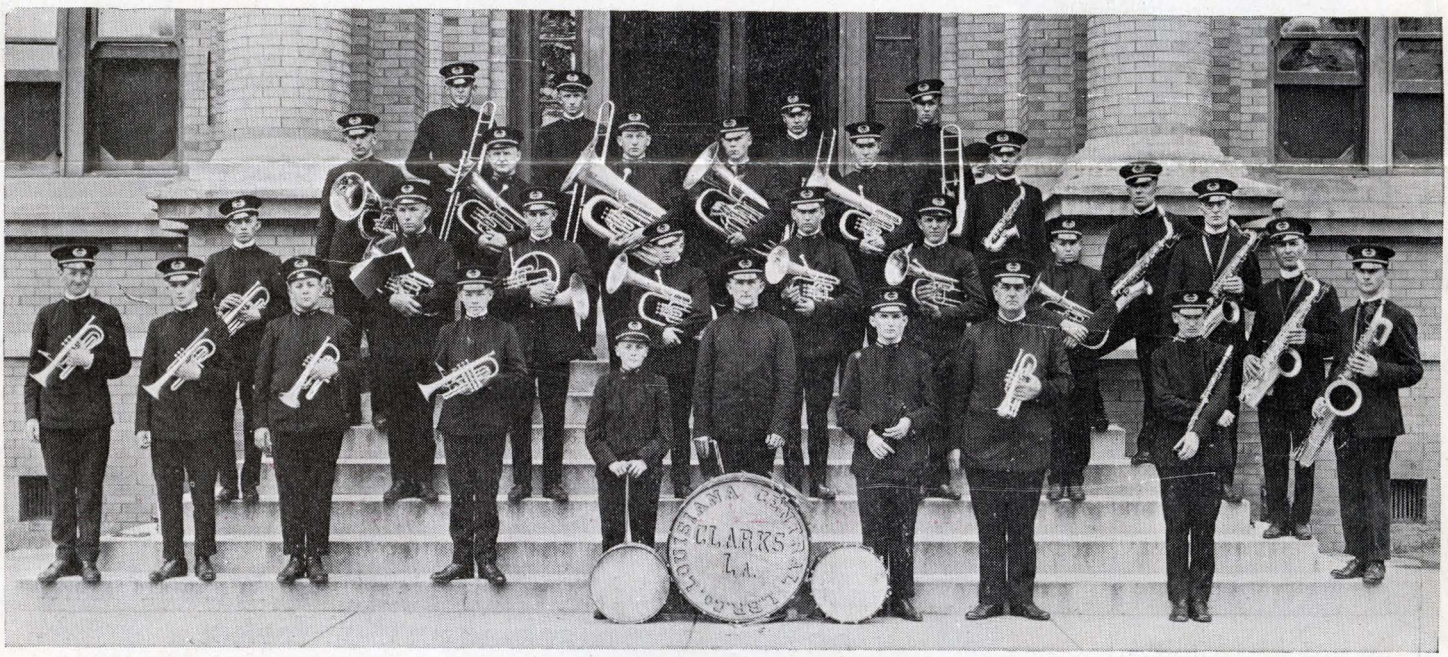

Louisiana Central Lumber Company—Band

Here is a good example of co-operative spirit–in this case music–between employes and employer. Every member of this band is an employe of the Company–Then it's some band from a musical standpoint, as well as "good looks."

This band is chiefly financed by the Company who is proud of the wonderful success it has made during the three years of existence.

Any Lumber Company would do well to imitate the example set by this progressive Company. Mr. A. W. Johnson is general manager, Clarks, La.

Copied from an original at The History Center. www.TheHistoryCenterOnline.com 2013:023

HARVEY HOG

Simple Construction—Fewer Parts

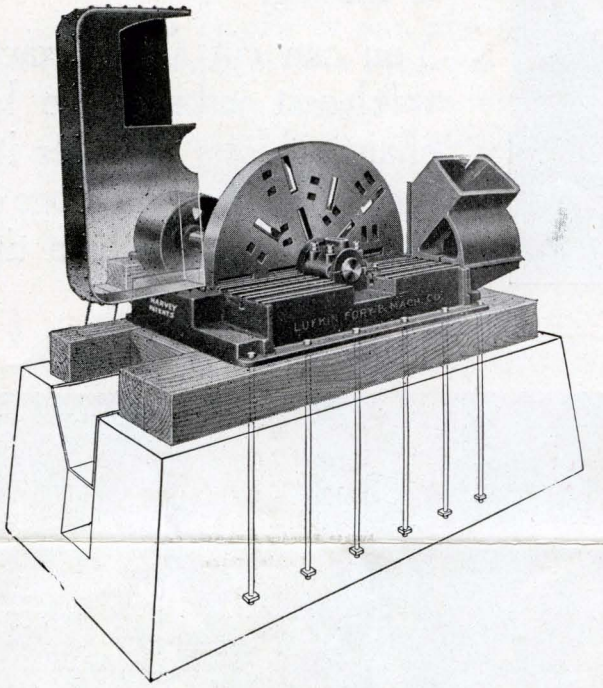

Adjustments Very Simple

15 Minutes to Change KNIVES

Fewer Knives and Fewer Repairs Make This the Most Economically Operated Machine on the Market

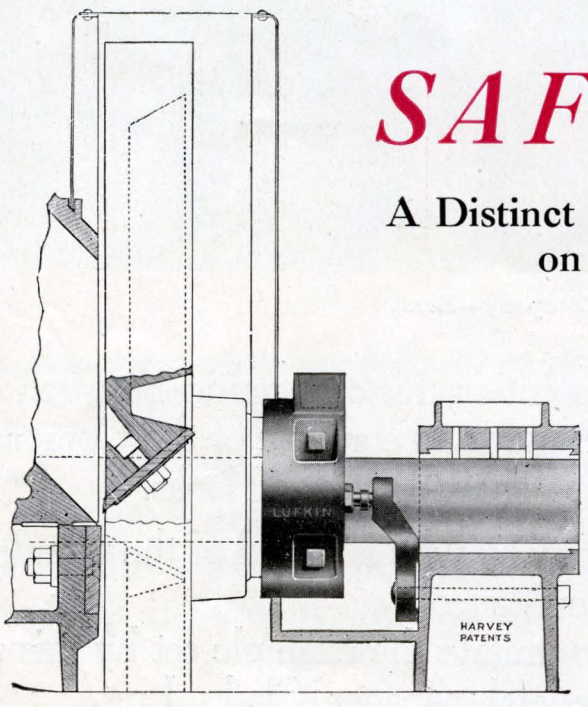

SAFETY DEVICE

A Distinct Feature of Our Machine That Is not Found on Any Like Machine on the Market.

Saves Knives—Saves Discs
Saves Continual Expense and Worry

Making This the Most Popular Machine on the Market Today

Copied from an original at The History Center. www.TheHistoryCenterOnline.com 2013:023

Any User of the HARVEY HOG *Will Testify Favorably*

LUMBER COMPANY
MANUFACTURERS OF
LONG LEAF BAND AND SAND SAWN
YELLOW PINE LUMBER
PINELAND, TEXAS

June 6, 1922

dry & Machine Co.,
a.

In reference to the 60" Harvey Hog
stalled in our Hemphill mill, write
machine is giving good service in
making fine fuel and taking all the
put into it. The expense of up-keep
t indeed. As you know, we operate
chine in our Pineland mill, install-
920, and as you have been advised
machine is doing all that you said
d by the way, we were in position
a critical comparison, since we had
other Hogs, each of different makes
ing the Harvey

Since we had not commented on the per-
the hog in the Hemphill mill, and by
removed from that mill a Hog of another
installed the Harvey, thought it about
te you just how we are getting along with

Yours very truly,
TEMPLE LUMBER COMPANY.

NEW DEEMER MANUFACTURING COMPANY, INC.
CAPITAL $500,000.00
MANUFACTURERS OF
SOFT PINE AND SOUTHERN HARDWOODS
DIRECTORS

DEEMER, MISS., March 10, 1921.

Houston Brothers,
Vicksburg, Miss.

Gentlemen:

We have your letter of March 7th, inquiring as to the kind of hog we are using in our sawmill, and in reply, will advise that we have a HARVEY hog which is sold, as we understand, by the Lufkin Foundry & Machine Company at Lufkin Texas.

The writer has had considerable experience with the------ and ---, and we want to say to you very frankly that the HARVEY hog is unquestionably the best one on the market. We believe that you would get more satisfactory results from it and at less expense of up-keep than any other on the market.

We are unable to tell you just what a new HARVEY hog will cost, but regardless of the price, we do not believe you would make a mistake in buying the HARVEY.

We believe that the Lufkin Foundry & Machine Company are manufacturers of the HARVEY hog and a letter addressed to them at Lufkin, Texas, will, we are sure, have their attention.

Yours truly,
NEW DEEMER MFG. COMPANY, INC.

HHB/G
Superintendent.

ROSEMARY PINE

ADAMS BANKS LUMBER CO.
Successors to
Hall & Logan Lumber Co.
MANUFACTURERS OF
Yellow Pine Lumber
MORTON, MISS.
June 6, 1922.

Lufkin Foundry & Machine Co.,
Lufkin, Texas.

Gentlemen:-

Some two years ago we were having trouble getting enough fuel through our Hog to keep our battery of six boilers going and it was taking three or four men to feed it. We were discussing this with one of our sawmill friends and he asked us why we did not put in a Harvey Hog and get the benefit of all our refuse.

We investigated the Harvey Hog fully and bought a sixty inch. Since installing it we have gotten all the fuel we need, better fuel with less sticks and at less expense for feeding. It will grind up all the refuse we make but that is more than our present battery of eight boilers require, so we are forced to let at least one third of the slabs and sticks go to the burner.

We are well pleased with our Harvey Hog and if at any time a good word will help you sell a prospective buyer, just refer him to us.

With kindest regards, we are,

Yours very truly,
ADAMS BANKS LUMBER COMPANY.
WBH:HT
Supt.

WHITE-GRANDIN LUMBER COMPANY, Inc.
MANUFACTURERS
CALCASIEU LONG LEAF PINE
SLAGLE, LA.

December 19, 1922

ufkin Foundry & Machine Company
ufkin, Texas

ntlemen:

Referring to the 48" Harvey Hog which we pur-
ased from you and installed some 90 days ago, we take
easure in stating that we have found this hog a very
fficient piece of machinery and our boys report to me
at its operation is better than that of any other hog
at they have had any experience with

The compactness and small size of this hog
r its capacity makes the installation very easy, and
e few working parts and simplicity of its make-up and
l working parts easy to get at are the features that make
is hog so suitable to us

Yours truly,
Sec'y & Gen'l Manager

ANNUAL CAPACITY 35,000,000 FEET
FORDYCE LUMBER CO.
MANUFACTURERS OF BAND SAWN
ARKANSAS SOFT PINE
AND HARDWOODS OF QUALITY
CROSSETT-WATZEK-GATES INTERESTS
FORDYCE, ARKANSAS
JUNE 8, 1922

Lufkin Foundry & Machine Co.,
Lufkin, Texas.

Gentlemen:---

We have your favor of recent date asking that we give you our experience with the Harvey Hog, and in reply beg to advise that we installed a 60" Harvey something over three years ago and it has been very satisfactory indeed. The Hog is well balanced, consequently the horsepower required to drive is small; it makes good fuel and is easy to operate. As you probably know we have a two band mill, cutting hardwood one or two days each week through the pine mill, and we do not find it necessary to operate this hog over four or five days each week to keep us in fuel.

Very truly
FORDYCE LUMBER COMPANY
Supt Mfg

SANER RAGLEY LUMBER CO
MANUFACTURERS
LONG LEAF YELLOW PINE LUMBER
CARMONA TEXAS

June 13, 1922

. E. H. Bounds,
Mgr. Machinery Sales, Lufkin Foundry & Machine Co.
Lufkin, Texas

r Sir:

We are very glad to use this means of boost-
the Harvey Hog. Sometime ago, after we took over
Saw Mill Plant at this place, we found installed
rein, a Harvey Hog. At first we were not so well
ressed with this machine as it was not giving the
t results. However, upon investigation we found
t the machine was not properly installed and was
refore laboring under difficulties. We had a re-
tallation of this machine made by a good Mill Right,
ce which time it has run, almost perfectly. We
e never seen a hog do anything like as good work
this one, and have never seen one as economical in
power required to run it, and in its up keep

We consider this machine an excellent in-
tment and do not hesitate to give it our unqualified
orsement. Give it an occasional sharp knife, some-
ng to work on, and your fuel problem is solved.

Yours very truly,
SANER RAGLEY LBR CO.
Superintendent.

:DB

J.C. GATES, Pres't J.F. GATES, V. Pres't B.A. CANNON, Treas. & Mgr. F.C. SEYMOUR, Sec'y & Asst Mgr

MANUFACTURERS OF
ARKANSAS SOFT PINE
CRATING, LATH
AND
SOUTHERN HARDWOODS

Our Facilities Enable us to Ship Promptly
SAWING & PLANING CAPACITY
100,000 FT PER DAY

GATES LUMBER CO.
WILMAR, ARK.

June 7, 1922

Lufkin Foundry & Machine Company,
Lufkin, Texas

Gentlemen.

We have yours of June 3 in regard to our Harvey Hog, and in reply will say that we can fully recommend the Harvey to any sawmill man that is in need of a fuel maker. The hog we have is entirely satisfactory and has not given us a minute's trouble since the day it was installed

Yours truly,
GATES LUMBER COMPANY,

BAC:MB
Manager.

N.P. SANDERSON, President J.W. REYNOLDS, Vice Pres't ALEX THOMPSON, Vice Pres't E.J. BOOTH, Sec'y & Treas

ROCK CREEK LUMBER COMPANY
MANUFACTURERS OF
YELLOW PINE
CAPITAL STOCK $500,000.00

TRINITY, TEXAS, March 8, 1921

Mr. W. C. Trout,
Lufkin Foundry & Mch. Co.,
Lufkin, Texas.

Dear Sir:

With reference to the Harvey Hog; We find that this hog is giving us even better service in the new mill than it did in the old; this is due to the fact that the hog is installed in such a way it has a better show to do its work.

I consider the Harvey hog one of the best investments we have ever made for several reasons: It takes less power to drive, upkeep is less, capacity is all that one could desire and the class of fuel is whatever you choose to make it. We would install the Harvey hog in preference to any other make on the market.

Yours very truly,
General Manager

EJB-E

Copied from an original at The History Center. www.TheHistoryCenterOnline.com 2013:023

THE MILL SUPPLY AND SPECIALTY DEPARTMENT ANNOUNCE A CHANGE OF CONNECTIONS OF THEIR MECHANICAL RUBBER GOODS LINE

As most of you know, we have recently made a change of connections on our line of MECHANICAL RUBBER GOODS. For years we have handled the line of the Manhattan Rubber Mfg. Co., mainly their Condor and Whalebone Belting—but effective January 1st, 1923 we decided to make a change and our choice from propositions made us from every manufacturer of Mechanical Goods known was the QUAKER CITY RUBBER CO., of PHILADELPHIA, PA.

There were various and sundry reasons, of course, for our making this change, but the main thing that interests you sawmill men is that the principal reason was that we felt that we could best serve our mutual interests by doing so—and the advantage given us in making this change by having propositions from every known manufacturer of Mechanical Rubber Goods—makes us feel all the more reasonably certain that we have done the thing that will be to the best interest of yourselves and ourselves.

The line of Mechanical Rubber Goods manufactured by the QUAKER CITY RUBBER CO., is BROADER —they have a line of BELTING that is unsurpassed—their line of HOSE, (steam, air, water, etc.,) PACKING and VALVES cannot be excelled. We feel with no uncertainty that with a larger line to draw from that we are in better position to serve our customers.

Probably the QUAKER CITY RUBBER CO., is better known to the sawmill men of East Texas (from whom our largest demand orginates, but by no means is our field limited to this territory for we ship belting most every day to Louisiana, Arkansas and parts of Mississippi) through their famous line of DANIELS PPP ROD PACKING, which has been the most universally known and demanded packing on the American market for over a quarter of a Century. The fact that they have been known only in East Texas through their line of packing is due to the fact that they have not had representation on their lines of Belting. But their line of Belting is most favorably known and universally used throughout the sawmills in the South and on the Pacific Coast where they have Jobbers and Branch Houses but we are glad to be the pioneers in this line in this section giving our customers the advantage of a complete and unexcelled line of Mechanical Rubber Goods.

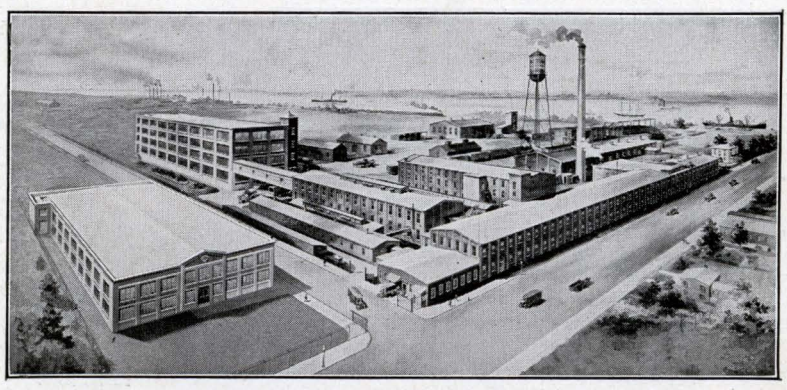

WORKS OF THE QUAKER CITY RUBBER CO.,
Philadelphia, Pa.

Copied from an original at The History Center. www.TheHistoryCenterOnline.com 2013:023

REDSKIN

Red Friction Surface Transmission Belting

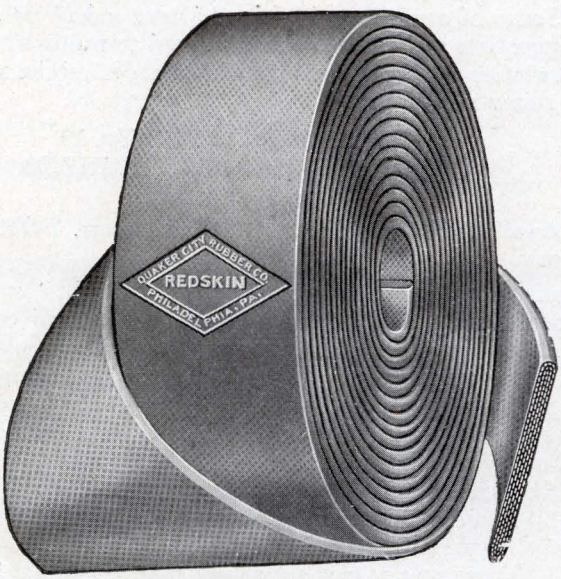

An unusually high grade belt with red friction surface cover. Made on extra heavy duck. The plies are exceptionally well frictioned, compounded to stand great endurance. REDSKIN is a pliable belt conforming naturally to pulley conditions, no matter how severe. Particularly noted for its long life and freedom from stretch.

REDSKIN meets the demand for heavy service on main drives, edgers, band mills, hogs and where an exceptional belt is required.

FRICTIONCLAD

Grey Friction Surface Belting for High Speed Duty

FRICTIONCLAD is primarily a belt for high speed duty on small pulleys, therefore for a given thickness it contains more plies than ordinary belting to give it the necessary flexibility and strength so necessary for duty on the modern high speed planing machines. The friction used is specially compounded for the purpose, and care is exercised to reduce the stretch to the minimum. FRICTIONCLAD clings to the pulleys and delivers the power.

In ordinary practice, the specifications run as follows:

3, 4, 5″ widths	5 ply
6″ widths	6 ply
7″ widths	7 ply
8″ widths	8 ply

For widths above 8″ we recommend our standard construction belts.

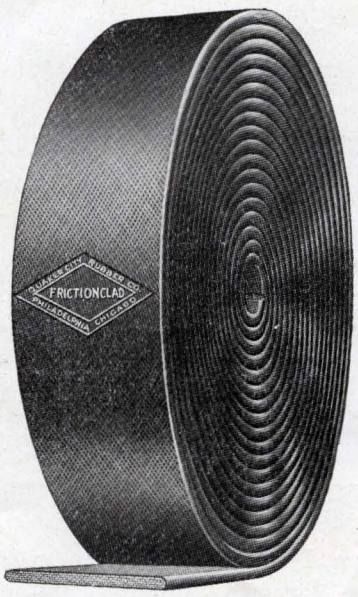

Copied from an original at The History Center. www.TheHistoryCenterOnline.com 2013:023



Mary had been spanked by her mother. She was crying in the hallway when the minister entered.

"Well, well, what's the matter with my little girl today?" he asked.

"It hurts," she sobbed.

"What hurts, my dear?"

"The back of my lap."

HIS QUALIFICATIONS

A prominent man was asked a short time ago for information in regard to a youth whom a firm was considering taking into their office. He wrote:

"I believe Mr.——to be an excellent young man. He is a grandson of Gen.——. He is the cousin of C— B— S—; related to the H— G— N—'s, and has an excellent bringing up in every way."

The following reply was received from the firm inquiring:

"Dear Mr.——: Thank you very much for your letter in regard to Mr.——. We would say, however, that we do not want the young man for breeding purposes, but for clerical work.—Forbes Magazine.

GEORGE GOT FRUSTRATED

Mrs. Uppish, who had social aspirations not yet attained, decided to get a colored butler. George, a clean, well brought up boy, applied for the position. Mrs. Uppish proceeded to make a critical examination as to George's capabilties and fitness for the position with special reference to cleanliness. She examined his head, suspecting that wooly scalp might harbor pediculi capitis. She critically examined his hands, his finger nails and his clothing. She asked him to remove his shoes; his feet were also in a sanitary condition. As he seemed to be a likely candidate she said:

"Now George, I want to see your testimonials."

"Well, Sir," said George, recounting his experience, "by this time ah had got so goldarn flustrated I couldn't stand no mo' and ah lef' that place so sudden ah fo'got mah hat; an' mo' ovah, ah ain't goin' back foh it neither".



Some of our saw mill friends have asked us about our suggestion system—We are pleased to publish "rules and regulations". We are of the opinion it might work well in a saw mill plant.

SHOP BULLETIN No. 19
$25 EACH MONTH IN PRIZES
For Suggestions
Available to all EMPLOYEES except FOREMEN

This company desires suggestions from any employee that will improve our production in design, material or workmanship, under the following rules and conditions:

All suggestions should be written out on plain paper, with sketches, if any, on separate sheets, using this size sheet 8½x10½; number your sheets—date them and sign your name—drop in suggestion box which will be collected every Monday morning.

Suggestions on the following are desired:

1—Increasing Co-operation.

2—Improving Quality of Product.

3—Decreasing cost of production without decreasing wages, quality, or making or purchasing tools that will cost more than the saving.

4—Eliminating unnecessary and duplication of work.

5—Better plans for doing shop work, suggestions concerning changes in patterns, too much stock, too little stock, in finishing unnecessary chipping—coring holes—or perhaps drilled holes will save fitting time—adding lugs for chucking.

Improvements in jigs-tools—methods of handling to save labor. Suggestions that will save waste, losses in supplies, tools and equipment.

6—Suggestions changing to advantage the way patterns could be made to reduce losses and increase production—the saving perhaps of core work—improving equipment—any suggestions that are beyond the employees power to improve himself—either in his own work, or other employees.

7—Improving safety precautions that will cut down chances of accident.

8—Improvements in selling plans—finishing and shipping.

9—Constructive criticism in management will be considered for prizes, providing same has an idea showing condition can be improved or eliminated, that will improve our production.

10—Suggestions that pertain to maintainance, repairs or work about the plant, defective wiring or plumbing etc. will not be considered for prizes.

How Prizes Will Be Paid

The secretary will open suggestion box every Monday morning, and will typewrite suggestions and number them, keeping original only with suggestors name, so that the suggestion will be considered only on its merits regardless of who makes it.

The awarding committee will consist of the manage-

Copied from an original at The History Center. www.TheHistoryCenterOnline.com 2013:023

ment and such other employees whom they may choose to assist from time to time, the idea being to have different men pass on these suggestions and arouse interest.

Awards will be made for previous month's suggestions on the first Monday of each month and posted—payments will be due on following pay day as follows:

Prize for what is considered the most valuable suggestion	$10.00
2nd best suggestion	5.00
Next five each	2.00

One man may take all prizes if he has the suggestions that will warrant the award, but it is desired that every employee become interested enough to think out ways and means to better his work and put it in suggestion form so that there will be a monthly distribution.

If you are a progressive workman, you are bound to think.

Let Us Have Your Ideas

Anyone wanting help with sketches or the suggestions, secretary Vincent Terry will help put same in shape for you.

Asking your cooperation, I am,

Yours,
LUFKIN FOUNDRY & MACHINE CO.
W. C. TROUT, Sec.-Mgr.

STANDARD AUTO SIGNALS



LEFT TURN: Extend arm and point first finger to left.

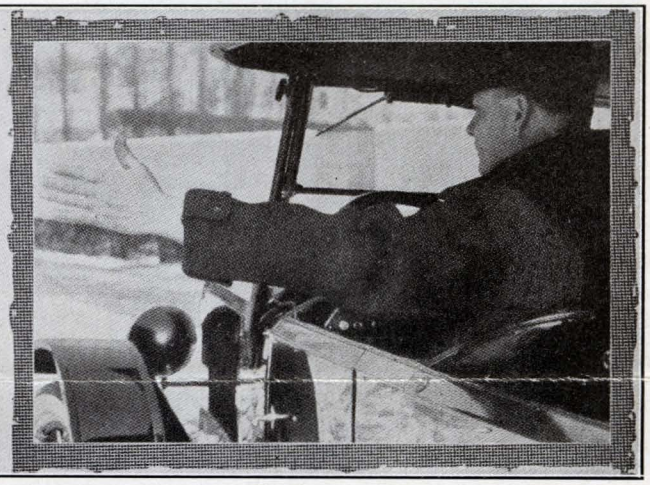

STOP: Extend arm with back of hand to rear.



BACK: Extend arm and motion with palm of hand to rear.

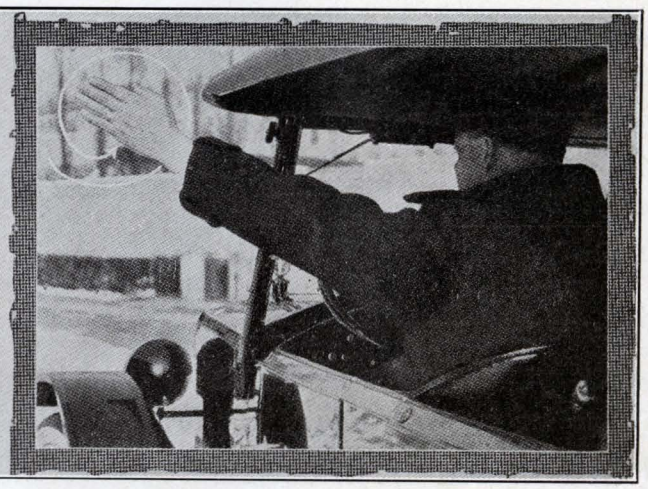

TURN ROUND. Circle arm and hand three times.

Simply extending the hand doesn't always convey to the motorist in the rear just what the man in front intends to do. These four simple signals tell whether he is going to stop, turn, circle, or back. Motorists should memorize these signals, as their universal adoption will do much to prevent confusion and accidents.

Copied from an original at The History Center. www.TheHistoryCenterOnline.com 2013:023

THE NEW STYLE IMPROVED

Trout Vertical Steam Feed Valve

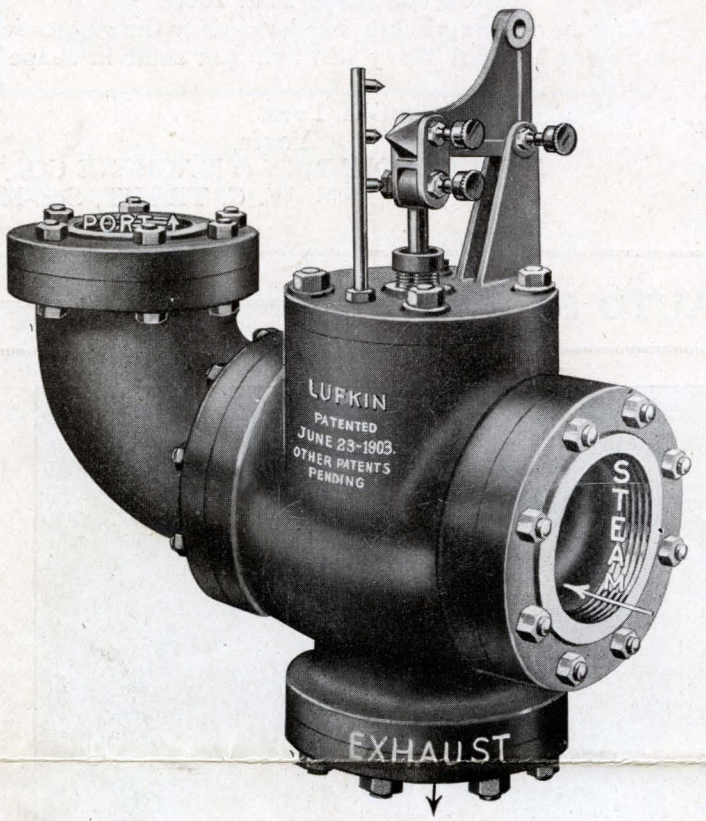

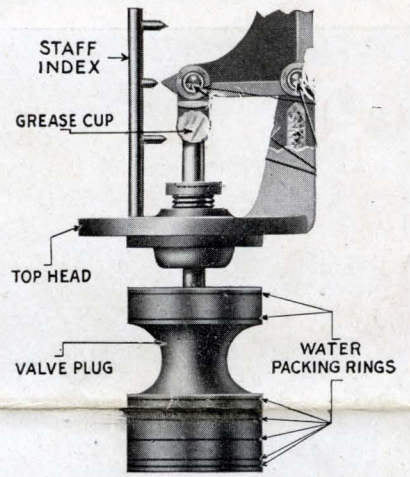

They have a renewable liner that is interchangeable, making it unnecessary for you to take your whole valve down for reboring—just insert a new liner and your troubles are over.

Positive shut off in case something breaks.

They will increase your cut 10% and lower your fuel consumption by the saving of steam. The saving of fuel alone is worth the price of the valve, yet this is a minor item of savings effected.

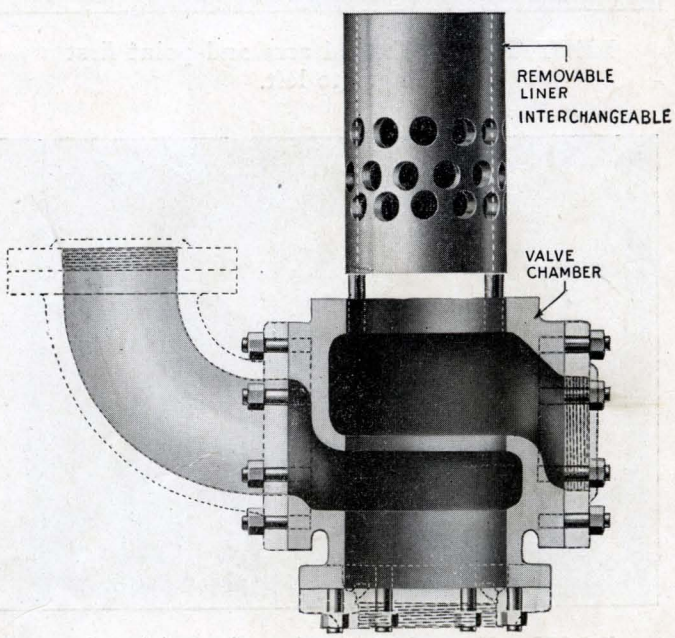

The Only Steam Feed Valve on the American Market Today With a Renewable—Interchangeable Liner

LET US SEND THEM TO YOU ON TRIAL